Commercial Vehicles

Crafter

Crafter Panel Van Specifications

X = standard O = optional - = not available

Crafter Panel Van Specification	Crafter 35 Panel Van 2.0 TDI 103kW (MCV)	Crafter 35 Panel Van 2.0 TDI 103kW (LCV)	Crafter 35 Panel Van 2.0 TDI 103kW Auto (MCV)	Crafter 35 Panel Van 2.0 TDI 103kW 4MOTION® (MCV)
Engine				
Cylinders	4	4	4	4
Capacity (cm^3)	1968	1968	1968	1968
Output (kW @ r/min)	103@3500-3600	103@3500-3600	103@3500-3600	103@3500-3600
Torque (Nm @ r/min)	340 @ 1600-2250	340 @ 1600-2250	340 @ 1600-2250	340 @ 1600-2250
CO_2 emissions (g/km)**	193	193	214	238
Transmission				
6-speed Manual	X	X	-	X
8-speed Automatic	-	-	X	-
Fuel Consumption				
Urban cycle (litres / 100 km)**	8,8	8,7	8,7	9,7
Extra-urban cycle (litres / 100 km)**	6,5	7,3	7,6	8,4
Combined cycle (litres / 100 km)**	7,3	7,6	8,2	9,1
Running Gear				
Front-wheel drive	X	X	X	-
Rear-wheel drive, dual tyres	-	-	-	-
4MOTION® all-wheel drive, dual tyres	-	-	-	X
Brakes				
Disc brakes in front, 16-inch (303 mm diameter)	X	X	X	X
ESP (Electronic Stabilisation Programme) with Brake Assist	X	X	X	X
Crosswind Assist	X	X	X	X
Anti-lock braking system (ABS)	X	X	X	X
ASR traction control with electronic differential lock (EDL)	X	X	X	X
Emergency braking signal	X	X	X	X
Wheelrims / Tyres				
Centre wheel covers	X	X	X	X
4 steel wheels, 6.5Jx16 with 1200 kg load	X	X	X	X
6 steel wheels 5.5J x 16, in silver (dual tyres in rear)	-	-	-	-
Tyres 205/75 R16 C113/111	X	X	X	X
Tyres 205/75 R16 C113/111 (with twin tyres at rear)	-	-	-	-
Full-size spare wheel (steel)	X	X	X	X
Dimensions / Capacities				
Fuel tank (l)	75	75	75	75
Length (mm)	5986	5986	5986	5986
Height (mm)	2355	2355	2355	2355
Width excl. mirrors (mm)	2040	2040	2040	2040

Crafter Panel Van Specifications

X = standard O = optional - = not available

Crafter Panel Van Specification	Crafter 35 Panel Van 2.0 TDI 103kW (MCV)	Crafter 35 Panel Van 2.0 TDI 103kW (LCV)	Crafter 35 Panel Van 2.0 TDI 103kW Auto (MCV)	Crafter 35 Panel Van 2.0 TDI 103kW 4MOTION® (MCV)
Dimensions / Capacities (continued)				
Wheelbase (mm)	3640	3640	3640	3640
Overhang - front (mm)	1000	1000	1000	1000
Overhang - rear (mm)	1346	1346	1346	1346
Turning circle (m)	13,6	13,6	13,6	13,6
Ground Clearance (mm)	195	195	195	195
Load compartment length (mm)	3201	3201	3201	3201
Load compartment width (mm)	1832	1832	1832	1832
Load compartment height with Normal roof (Crafter 35)	1726	1726	1726	1626
Load compartment height with High roof (Crafter 35)	1961	1961	1961	1861
Load compartment width between wheelhouses (mm)	1380	1380	1380	1380
Load volume to roof - all seats in place (m^3)	9,9	9,9	9,9	9,3
Load volume to roof - all seats in place with High roof (m^3)	11,3	11,3	11,3	10,7
Sliding door aperture width (mm)	1311	1311	1311	1311
Sliding door aperture height (mm)	1587	1587	1587	1487
Sliding door height with High roof (mm)	1822	1822	1822	1722
Rear wing doors width (mm)	1552	1552	1552	1552
Rear wing doors height (mm)	1605	1605	1605	1505
Rear wing doors height with High roof (mm)	1840	1840	1840	1740
Gross Vehicle Mass (GVM) (kg)	3550	3490	3550	3550
Gross Combined Mass (GCM) (kg)	6000	6000	6000	6000
Axle load limit front / rear (kg)	1800/2100	1800/2100	1800/2100	1800/2100
Trailer weight braked, 12% gradient (kg)	3000	3000	3000	3000
Payload with driver (kg)	1597	1537	1565	1471
Unladen Mass without driver and fuel (kg)	1953	1953	1985	2079
Seats				
Number of seats	3	3	3	3
Height-adjustable head restraints	X	X	X	X
Driver seat includes longitudinal and backrest angle adjustment	X	X	X	X
2-seater front passenger bench seat with storage compartment	X	X	X	X
Warning buzzer and light for driver seatbelt not fastened	X	X	X	X
Seat trim covers in fabric "Austin"	X	X	X	X
Windows				
Laminated windscreen with heat-insulating glass, 1.8 m^2, inclination angle 47.86°	X	X	X	X
Windows with heat-insulating glass	X	X	X	X
Electric window winders - front	X	X	X	X

Crafter Panel Van Specifications

X = standard O = optional - = not available

Crafter Panel Van Specification	Crafter 35 Panel Van 2.0 TDI 103kW (MCV)	Crafter 35 Panel Van 2.0 TDI 103kW (LCV)	Crafter 35 Panel Van 2.0 TDI 103kW Auto (MCV)	Crafter 35 Panel Van 2.0 TDI 103kW 4MOTION® (MCV)
Mirrors				
Manually adjustable exterior mirrors	X	X	X	X
Left and right exterior mirror, convex, with integrated LED turn signal and wide-angle range	X	X	X	X
Wiper system				
Intermittent wipers	X	X	X	X
Safety				
Automatic post-collision braking system	X	X	X	X
Hill-hold assist	X	X	X	X
Crosswind Assist	X	X	X	X
Driver Alert System	X	X	X	X
Driver and front passenger airbag with front passenger airbag deactivation	X	X	X	X
Roll bar intergrated into B and D pillars to comply with R66-02 roll-over test.	-	-	-	-
High level third brake light with LED technology	X	X	X	X
3-point automatic seatbelts	Front	Front	Front	Front
Height-adjustable outer seatbelts	Front	Front	Front	Front
First Aid Kit and warning triangle	X	X	X	X
One wheel chock	X	X	X	X
Security				
Immobiliser	X	X	X	X
Central locking system with radio remote control and interior release mechanism	X	X	X	X
Audio and Communication				
Radio preparation	X	X	X	X
2 speakers	X	X	X	X
Interior Features				
Electro-mechanical power-steering	X	X	X	X
Rubber floor in cab	X	X	X	X
Lashing points for load restraint	10	10	10	10
Smoking package and 4 beverage holders in dashboard	X	X	X	X
Door pockets front	X	X	X	X
Interior lights including load compartment	X	X	X	X
Two 12V sockets in cab	X	X	X	X
Glove compartment	X	X	X	X
Grab handle on partition in load/passenger compartment	X	X	X	X
Load compartment lighting: 2 spots	X	X	X	X
Partition	X	X	X	X
Heating system in cab	X	X	X	X

Crafter Panel Van Specifications

X = standard O = optional - = not available

Crafter Panel Van Specification	Crafter 35 Panel Van 2.0 TDI 103kW (MCV)	Crafter 35 Panel Van 2.0 TDI 103kW (LCV)	Crafter 35 Panel Van 2.0 TDI 103kW Auto (MCV)	Crafter 35 Panel Van 2.0 TDI 103kW 4MOTION® (MCV)
Exterior Features				
Sliding doors (without windows)	Left only	Left only	Left only	Left only
Wing doors at rear without windows	X	X	X	X
Rear fog light	X	X	X	X
Mud flaps	X	X	X	X
Towbar Preparation (towing capacity max. 3.5t) with trailer stabilisation	X	X	X	X
Grey bumper in front with painted trim panel in body colour	X	X	X	X
Standard roof	X	X	X	X
High roof, outside painted in body colour	O	O	O	O
Hinges for rear wing doors with increased opening angle (max. 270°)	O	O	O	O
Radiator grille, unpainted, with one chrome molding	X	X	X	X
Rear wing doors without window apertures	X	X	X	X
Side marker lamps	-	-	-	-
Halogen twin headlamps	X	X	X	X
Separate daytime running light	X	X	X	X
Options				
Climatic® airconditioning system	O	O	O	O
Climatic® airconditioning system with second evaporator	O	O	O	O
Radio 'Composition Colour' with 6.5" touchscreen, 4 speakers, mobile interface and App-Connect	O	O	O	O
Cruise control system including speed limiter	O	O	O	O
Multi-function steering wheel	O	O	O	O
Metallic Paint	O	O	O	O
Fixed towbar with trailer stabilisation	O	O	O	O
Second sliding door	O	O	O	O
Single front passenger seat	O	O	O	O
High roof, outside painted in body colour	O	O	O	O
Super-high roof in plastic, in Candy White with overhead storage compartment with 2DIN and reading light	-	-	-	-
270° rear doors	O	O	O	O
Dual sliding doors	O	O	O	O
Trendline package including overhead storage compartment with two 1-DIN slots and reading light, chrome elements in cab, grey bumper in front with painted trim panel in body colour, four 12V outlets, interior sound insulation, illuminated glove compartment with lockable lid, painted radiator grille, with 3 chrome trims, front fog lamps with cornering light and step illumination in front, driver side	O	O	O	O
LED headlamps with LED separate daytime running light	O	O	O	O
Park Distance Control in front and rear	O	O	O	O
Park Distance Control in front and rear with sensor-based side protection (Only with Zi4 'Composition Media' Radio)	O	O	O	O
Trailer manoeuvering system including Trailer Assist, Park Assist, and Park Distance Control with sensor-based side protection	O	O	O	O
Rear-view camera system	O	O	O	O

Crafter Panel Van Specifications

X = standard O = optional - = not available

Crafter Panel Van Specification	Crafter 35 Panel Van 2.0 TDI 103kW (MCV)	Crafter 35 Panel Van 2.0 TDI 103kW (LCV)	Crafter 35 Panel Van 2.0 TDI 103kW Auto (MCV)	Crafter 35 Panel Van 2.0 TDI 103kW 4MOTION® (MCV)
Options (continued)				
Blind Spot Monitor including Rear Traffic Alert which includes two rear radar sensors to detect moving objects behind the vehicle within a range of approximately 20 metres	O	O	O	O
Fixed towbar with Trailer Stabilisation	O	O	O	O
Comfort Driver's Seat including longitudinal seat adjustment as well as backrest angle, height adjustment, mechanical 2-way lumbar support, an adjustable seat cushion angle and a single armrest on the inner side	O	O	O	O
Second battery	O	O	O	O
Lane Assist including Blind Spot Monitor with Rear Traffic Alert and Park Distance Control in front and rear with sensor-based side protection. Includes exterior mirrors, power-adjustable heated and folding	O	O	O	O
Forward Collision Warning Front Assist with Autonomous Emergency Braking for Adaptive Cruise Control (ACC). Includes speed limiter with multi-function steering wheel	O	O	O	O
Differential lock	-	-	-	O
Hill start assist/hill descent control	-	-	-	O
Guarantees				
2-year / unlimited km manufacturer warranty	X	X	X	X
5-year / 120,000 km EasyDrive Plan	X	X	X	X
20,000 km service intervals	X	X	X	X
12-year anti-corrosion warranty	X	X	X	X

Crafter Panel Van Specifications

X = standard O = optional - = not available

Crafter Panel Van Specification	Crafter 50 Panel Van 2.0 TDI 103kW LWB HR	Crafter 50 Bus Conversion ready 2.0 TDI 103kW LWB HR	Crafter 50 Panel Van 2.0 TDI 103kW XL	Crafter 50 Bus Conversion ready 2.0 TDI 103kW XL
Engine				
Cylinders	4	4	4	4
Capacity (cm^3)	1968	1968	1968	1968
Output (kW @ r/min)	103@3500-3600	103@3500-3600	103@3500-3600	103@3500-3600
Torque (Nm @ r/min)	340 @ 1600-2250	340 @ 1600-2250	340 @ 1600-2250	340 @ 1600-2250
CO_2 emissions (g/km)**	227	227	227	227
Transmission				
6-speed Manual	X	X	X	X
8-speed Automatic	-	-	-	-
Fuel Consumption				
Urban cycle (litres / 100 km)**	8,9	8,9	8,9	8,9
Extra-urban cycle (litres / 100 km)**	6,8	6,8	6,8	6,8
Combined cycle (litres / 100 km)**	7,5	7,5	7,5	7,5
Running Gear				
Front-wheel drive	-	-	-	-
Rear-wheel drive, dual tyres	X	X	X	X
4MOTION® all-wheel drive, dual tyres	-	-	-	-
Brakes				
Disc brakes in front, 16-inch (303 mm diameter)	X	X	X	X
ESP (Electronic Stabilisation Programme) with Brake Assist	X	X	X	X
Crosswind Assist	X	X	X	X
Brake Assist	X	X	X	X
Anti-lock braking system (ABS)	X	X	X	X
ASR traction control with electronic differential lock (EDL)	X	X	X	X
Emergency braking signal	X	X	X	X
Wheelrims / Tyres				
Centre wheel covers	X	X	X	X
4 steel wheels, 6.5Jx16 with 1200 kg load	-	-	-	-
6 steel wheels 5.5J x 16, in silver (dual tyres in rear)	X	X	X	X
Tyres 205/75 R16 C113/111	-	-	-	-
Tyres 205/75 R16 C113/111 (with twin tyres at rear)	X	X	X	X
Full-size spare wheel (steel)	X	X	X	X
Dimensions / Capacities				
Fuel tank (l)	75	75	75	75
Length (mm)	6836	6836	7391	7391
Height (mm)	2625	2625	2637	2637
Width excl. mirrors (mm)	2069	2069	2069	2069

Crafter Panel Van Specifications

X = standard O = optional - = not available

Crafter Panel Van Specification	Crafter 50 Panel Van 2.0 TDI 103kW LWB HR	Crafter 50 Bus Conversion ready 2.0 TDI 103kW LWB HR	Crafter 50 Panel Van 2.0 TDI 103kW XL	Crafter 50 Bus Conversion ready 2.0 TDI 103kW XL
Dimensions / Capacities (continued)				
Wheelbase (mm)	4490	4490	4490	4490
Overhang - front (mm)	1000	1000	1000	1000
Overhang - rear (mm)	1346	1346	1901	1901
Turning circle (m)	16,2	16,2	16,2	16,2
Ground Clearance (mm)	195	195	195	195
Load compartment length (mm)	4051	4051	4606	4606
Load compartment width (mm)	1832	1832	1832	1832
Load compartment height with High roof (Crafter 50)(mm)	1861	1861	1861	1861
Load compartment height with Super-high roof (Crafter 50)(mm)	2089	2089	2096	2096
Load compartment width between wheelhouses (mm)	1030	1030	1030	1030
Load volume to roof - all seats in place (m^3)	13,6	13,6	15,5	15,5
Load volume to roof - all seats in place with High-roof / Super high-roof (m3)	15,3	15,3	17,5	17,5
Sliding door aperture width (mm)	1311	1311	1311	1311
Sliding door aperture height (mm)	1722	1722	1722	1722
Sliding door height with High roof / Super-high roof (mm)	1722	1722	1722	1722
Rear wing doors width (mm)	1552	1552	1552	1552
Rear wing doors height (mm)	1740	1740	1740	1740
Rear wing doors height with High roof / Super-high roof (mm)	1740	1740	1740	1740
Gross Vehicle Mass (GVM) (kg)	5000	5000	5000	5000
Gross Combined Mass (GCM) (kg)	8000	8000	8000	8000
Axle load limit front / rear (kg)	2220/3500	2220/3500	2220/3500	2220/3500
Trailer weight braked, 12% gradient (kg)	3500	3500	3500	3500
Payload with driver (kg)	2563	2563	2492	2492
Unladen Mass without driver and fuel (kg)	2437	2437	2508	2508
Seats				
Number of seats	3	3	3	3
Height-adjustable head restraints	X	X	X	X
Driver seat includes longitudinal and backrest angle adjustment	X	X	X	X
2-seater front passenger bench seat with storage compartment	X	X	X	X
Warning buzzer and light for driver seatbelt not fastened	X	X	X	X
Seat trim covers in fabric "Austin"	X	X	X	X
Windows				
Laminated windscreen with heat-insulating glass, 1.8 m^2, inclination angle 47.86°	X	X	X	X
Windows with heat-insulating glass	X	X	X	X
Electric window winders - front	X	X	X	X

Crafter Panel Van Specifications

X = standard O = optional - = not available

Crafter Panel Van Specification	Crafter 50 Panel Van 2.0 TDI 103kW LWB HR	Crafter 50 Bus Conversion ready 2.0 TDI 103kW LWB HR	Crafter 50 Panel Van 2.0 TDI 103kW XL	Crafter 50 Bus Conversion ready 2.0 TDI 103kW XL
Mirrors				
Manually-adjustable exterior mirrors	X	X	X	X
Left and right exterior mirror, convex, with integrated LED turn signal and wide-angle range	X	X	X	X
Wiper system				
Intermittent wipers	X	X	X	X
Safety				
Automatic post-collision braking system	X	X	X	X
Hill-hold Assist	X	X	X	X
Crosswind Assist	X	X	X	X
Driver Alert System	X	X	X	X
Driver and front passenger airbag with front passenger airbag deactivation	X	X	X	X
Roll bar intergrated into B and D pillars to comply with R66-02 roll-over test.	-	X	-	X
High level third brake light with LED technology	X	X	X	X
3-point automatic seatbelts	Front	Front	Front	Front
Height adjustable outer seatbelts	Front	Front	Front	Front
First Aid kit and warning triangle	X	X	X	X
One wheel chock	X	X	X	X
Security				
Immobiliser	X	X	X	X
Central locking system with radio remote control and interior release mechanism	X	X	X	X
Audio and Communication				
Radio preparation	X	X	X	X
2 speakers	X	X	X	X
Interior Features				
Electro-mechanical power-steering	X	X	X	X
Rubber floor in cab	X	X	X	X
Lashing points for load restraint	12	-	14	-
Smoking package and 4 beverage holders in dashboard	X	X	X	X
Door pockets front	X	X	X	X
Interior lights including load compartment	X	X	X	X
Two 12V sockets in cab	X	X	X	X
Glove compartment	X	X	X	X
Grab handle on partition in load/passenger compartment	X	-	X	-
Load compartment lighting: 2 spots	X	X	X	X
Partition	X	-	X	-
Heating system in cab	X	X	X	X

Crafter Panel Van Specifications

X = standard O = optional - = not available

Crafter Panel Van Specification	Crafter 50 Panel Van 2.0 TDI 103kW LWB HR	Crafter 50 Bus Conversion ready 2.0 TDI 103kW LWB HR	Crafter 50 Panel Van 2.0 TDI 103kW XL	Crafter 50 Bus Conversion ready 2.0 TDI 103kW XL
Exterior Features				
Sliding doors (without windows)	Left only	Left only	Left only	Left only
Wing doors at rear without windows	X	X	X	X
Rear fog light				
Mud flaps	front and rear	front and rear	front and rear	front and rear
Towbar Preparation (towing capacity max. 3.5t) with trailer stabilisation	X	X	X	X
Grey bumper in front with painted trim panel in body colour	X	X	X	X
Standard roof	-	-	-	-
High roof, outside painted in body colour	X	X	X	X
Hinges for rear wing doors with increased opening angle (max. 270°)	O	O	X	X
Radiator grille, unpainted, with one chrome molding	X	X	X	X
Rear wing doors without window apertures	X	X	X	X
Side marker lamps	X	X	X	X
Halogen twin headlamps	X	X	X	X
Separate daytime running light	X	X	X	X
Options				
Climatic® airconditioning system	O	O	O	O
Climatic® airconditioning system with second evaporator	O	O	O	O
Radio 'Composition Colour' with 8" touchscreen, 4 speakers, mobile interface and App-Connect	O	O	O	O
Cruise control system including speed limiter	O	O	O	O
Multi-function steering-wheel	O	O	O	O
Metallic Paint	O	O	O	O
Fixed towbar with trailer stabilisation	O	O	O	O
Second sliding door	O	O	O	O
Single front passenger seat	O	O	O	O
High roof, outside painted in body colour	X	X	X	X
Super-high roof in plastic, in Candy White with overhead storage compartment with 2DIN and reading light	O	O	O	O
270° rear doors	O	O	S	S
Dual Sliding doors	O	O	O	O
Trendline Package including overhead storage compartment with two 1-DIN slots and reading light, chrome elements in cab, grey bumper in front with painted trim panel in body colour, four 12V outlets, interior sound insulation, illluminated glove compartment with lockable lid, painted radiator grille, with 3 chrome trims, front fog lamps with cornering light and step illumination in front driver side	O	O	O	O
LED headlamps with LED separate daytime running light	O	O	O	O
Park Distance Control in front and rear	O	O	O	O
Park Distance Control in front and rear with sensor-based side protection (Only with Zi4 'Composition Media' Radio)	O	O	O	O
Trailer manoeuvering system including Trailer Assist, Park Assist, and Park Distance Control with sensor-based side protection	O	O	O	O
Rear-view camera system	O	O	O	O

Crafter Panel Van Specifications

X = standard O = optional - = not available

Crafter Panel Van Specification	Crafter 50 Panel Van 2.0 TDI 103kW LWB HR	Crafter 50 Bus Conversion ready 2.0 TDI 103kW LWB HR	Crafter 50 Panel Van 2.0 TDI 103kW XL	Crafter 50 Bus Conversion ready 2.0 TDI 103kW XL
Options (continued)				
Blind Spot Monitor including Rear Traffic Alert which includes two rear radar sensors to detect moving objects behind the vehicle within a range of approximately 20 metres	O	O	O	O
Fixed towbar with Trailer Stabilisation	O	O	O	O
Alloy Rims	-	-	-	-
Comfort Driver's Seat including longitudinal seat adjustment as well as backrest angle, height adjustment, mechanical 2-way lumbar support, an adjustable seat cushion angle and a single armrest on the inner side	O	O	O	O
Second battery	O	O	O	O
Lane Assist including Blind Spot Monitor with Rear Traffic Alert and Park Distance Control in front and rear with sensor-based side protection. Includes exterior mirrors, power-adjustable heated and folding	O	O	O	O
Forward Collision Warning Front Assist with Autonomous Emergency Braking for Adaptive Cruise Control (ACC). Includes speed limiter with multi-function steering wheel	O	O	O	O
Differential lock	-	-	-	-
Hill start assist/hill descent control	-	-	-	-
Guarantees				
2-year / unlimited km manufacturer warranty	X	X	X	X
5-year / 120,000 km EasyDrive Plan	X	X	X	X
20,000 km service intervals	X	X	X	X
12-year anti-corrosion warranty	X	X	X	X

Disclaimer

1. Dimensions, capacities and abilities apply to standard vehicles.
2. Actual consumption will vary with vehicle loading, driving style, climatic and road conditions.
3. This information was effective as at July 2021 valid for model year 22 and is subject to change without notice.

*100km/h speed limit for goods vehicles over 3 500kg GVM < 9 000kg GVM was gazetted into law 11 Nov 2016 under Regulation 293. Refer to Government Gazette No 40420 of 11 Nov 2016. Regulation 215 of the Regulations is hereby amended by the substitution for subregulation (1A) of the following subregulation "(1A) No person shall operate a- a) minibus; b) midibus; c) bus, or d) goods vehicle with the gross vehicle mass of which exceeds 3 500 kilograms, first registered after 1 December 2016, unless such minibus, midibus, bus or goods vehicle is fitted with a speed governor, restricting the speed of such motor vehicle to the speed limits as contemplated in regulation 293."**Fuel consumption and CO_2 emissions values were obtained in accordance with the prescribed uniform measuring standard (SANS 20101: 2006 / ECE R101: 2005 in its currently applicable version). The verified values do not apply to a specific vehicle and do not constitute part of the product offer. They are provided solely for the purposes of comparison between different vehicle models. Because of the need to maintain strict comparability of results achieved by the standard tests, they cannot be fully representative of real-life driving conditions. Variations in driving styles and in road, vehicle and ambient conditions, will have a bearing on the results achieved on the road. For these reasons, consumption achieved on the road will not necessarily accord with these verified values.Based on lightest variable (no options) and 90% tank filling. Weight may vary depending on options fitted to vehicle.
All diesel vehicles require low sulphur grade diesel of 50 ppm or lower.

Crafter Service & Maintenance Plans

Volkswagen EasyDrive Vehicle Maintenance Plans	Crafter 35 Panel Van 2.0 TDI 103kW (MCV)	Crafter 35 Panel Van 2.0 TDI 103kW (LCV)	Crafter 35 Panel Van 2.0 TDI 103kW Auto (MCV)	Crafter 35 Panel Van 2.0 TDI 103kW 4MOTION® (MCV)
Maintenance Plan (5-year / 120 000 km)	R9,208			
Maintenance Plan (5-year / 160 000 km)	R22,525			
Maintenance Plan (6-year / 200 000 km)	R38,108			
Maintenance Plan (6-year / 240 000 km)	R50,575			
Maintenance Plan (7-year / 280 000 km)	R61,058			
Maintenance Plan (8-year / 320 000 km)	R74,375			
Maintenance Plan (9-year / 360 000 km)	R88,400			
Maintenance Plan (10-year / 400 000 km)	R104,125			
Subject to an Active Standard Volkswagen warranty or an Active Genuine Volkswagen Service Plan				

Volkswagen EasyDrive Vehicle Service Plans	Crafter 35 Panel Van 2.0 TDI 103kW (MCV)	Crafter 35 Panel Van 2.0 TDI 103kW (LCV)	Crafter 35 Panel Van 2.0 TDI 103kW Auto (MCV)	Crafter 35 Panel Van 2.0 TDI 103kW 4MOTION® (MCV)
Service Plan (5-year/ 120 000 km)	X			
Service Plan (5-year/ 160 000 km)	R6,084			
Service Plan (6-year/ 200 000 km)	R14,284			
Service Plan (6-year/ 240 000 km)	R20,367			
Service Plan (7-year / 280 000 km)	R28,907			
Service Plan (8-year / 320 000 km)	R36,768			
Service Plan (9-year / 360 000 km)	R45,275			
Service Plan (10-year / 400 000 km)	R53,815			

Crafter Service & Maintenance Plans

Volkswagen EasyDrive Vehicle Maintenance Plans	Crafter 50 Panel Van 2.0 TDI 103kW LWB HR	Crafter 50 Bus Conversion ready 2.0 TDI 103kW LWB HR	Crafter 50 Panel Van 2.0 TDI 103kW XL	Crafter 50 Bus Conversion ready 2.0 TDI 103kW XL
Maintenance Plan (5-year / 120 000 km)	R9,208			
Maintenance Plan (5-year / 160 000 km)	R22,525			
Maintenance Plan (6-year / 200 000 km)	R38,108			
Maintenance Plan (6-year / 240 000 km)	R50,575			
Maintenance Plan (7-year / 280 000 km)	R61,058			
Maintenance Plan (8-year / 320 000 km)	R74,375			
Maintenance Plan (9-year / 360 000 km)	R88,400			
Maintenance Plan (10-year / 400 000 km)	R104,125			
Subject to an Active Standard Volkswagen warranty or an Active Genuine Volkswagen Service Plan				

Volkswagen EasyDrive Vehicle Service Plans	Crafter 50 Panel Van 2.0 TDI 103kW LWB HR	Crafter 50 Bus Conversion ready 2.0 TDI 103kW LWB HR	Crafter 50 Panel Van 2.0 TDI 103kW XL	Crafter 50 Bus Conversion ready 2.0 TDI 103kW XL
Service Plan (5-year/ 120 000 km)	X			
Service Plan (5-year/ 160 000 km)	R6,084			
Service Plan (6-year/ 200 000 km)	R14,284			
Service Plan (6-year/ 240 000 km)	R20,367			
Service Plan (7-year / 280 000 km)	R28,907			
Service Plan (8-year / 320 000 km)	R36,768			
Service Plan (9-year / 360 000 km)	R45,275			
Service Plan (10-year / 400 000 km)	R53,815			

Built for the **toughest jobs**

Volkswagen Commercial Vehicles understands that time is money and your business needs a vehicle that you can rely on; a vehicle that can handle the pressures of doing business in the most flexible and economical way.

By combining rugged versatility, cutting-edge engineering and a business-orientated approach, the Crafter is the ultimate transport solution.

Offering reliability, durability and adaptability all rolled into one package with the efficiency to match, the Crafter is practically tailor-made for your requirements. Its robust nature can cope with the most taxing road conditions and the fuel-efficient, economically friendly TDI engine makes it perfectly suited to the transportation demands of the typical South African business.

Take it all **the first time**

Industrious and dependable, the Crafter is your ultimate business partner. With its 75 litre fuel tank, sturdy frame and generous loading capacity, the Crafter will deliver no matter what. Boasting a loading capacity ranging between 9.9 m^3 and 17.5 m^3, the Crafter can handle any load thrown at it.

With one of the longest loading spaces in its class of up to 4.6m, you'll never have to leave anything behind.

Loading and unloading from the back is made easy through two rear wing doors or through the left-hand side 1.3 m wide sliding door. For even more convenience, a sliding door is optional for the right-hand side as well.

The flexible and practical nature of the Crafter makes it suited to a variety of applications. With a payload capacity of up to 2.5 tons and torque of up to 340 Nm, even the heaviest loads feel light. The Crafter is available in a 3.5 ton GVM version and a 5.0 ton GVM version. Choose between two wheelbases – 3,640 mm or 4,490 mm – three body lengths and three different roof configurations.
So no matter what your business or how tough the job, the Crafter offers the perfect solution to meet your transportation requirements.

Please note:
1) Equipment can result in an increase/decrease in the unladen weight and consequently affect the payload.
2) Depending on the equipment, the front axle load limit may increase to 1,800 kg. This can affect the minimum payload.
3) Depending on the equipment, the rear axle load limit may increase to 2,000 kg. This can affect the minimum payload.
4) There is no factory provision for a specific roof load on vehicles with a super-high roof.

The payloads listed have been established allowing for factory options or other tailored solutions that are not included in thestandard scope of delivery and services. The actual payload of a vehicle, which is calculated by the difference between the gross vehicle weight and the curb weight, can only be established by weighing the individual vehicle.

Built with **perfection in mind**

Attention has been given to every detail in the Crafter to ensure the comfort and safety of the driver and passengers. The cab ergonomics have been enhanced to ensure higher levels of practicality and ease of use in order to support the crew in their challenging work day. Improvements include robust seat upholstery for durability, a revised instrument cluster and control panel as well as plenty of storage compartments for a professional workspace.

The cab climate is easily controlled with a fresh air ventilator including air recirculation and heating as standard.

Other standard interior features include power-steering, heat-insulating glass, electric windows, radio preparation and door pockets.

Optional features include a radio/CD player, semi-automatic Climatic® airconditioning system, front reading lights and cruise control. All of these features have been built into the Crafter for your comfort and convenience, which means that you'll be more productive and able to give your business all the attention it deserves. Sporting the Volkswagen design DNA with its broader radiator grille, dominant headlight clusters and proud Volkswagen emblem – the Crafter looks every part as professional as it performs.

The safest **choice**

Safety is of the utmost importance to Volkswagen Commercial Vehicles and that's why the Crafter has been fitted with innovative safety features designed to deliver all-round protection. Essential safety systems such as ESP (Electronic Stabilisation Programme) combined with Brake Assist and Crosswind Assist, MCB (Multi-Collision Braking), TCS (Traction Control System), and EBD (Electronic Brake-force Distribution) are all standard in the Crafter.

Whether you're moving people, cargo or both, the Crafter works hard to keep them safely and securely on the road with a driver and passenger airbag as standard, three-point seatbelts, remote-controlled central locking and an optional anti-theft alarm.

The Crafter is fitted with a full metal partition without a window, which separates the cab from the freight in the load compartment.

The load area of the Crafter has also been equipped with lashing eyes as standard so your load can be secured using tie-down belts. The lashing eyes have a strong retention force of 500daN(kgs). There are 10 lashing eyes in the medium wheelbase version of the Crafter, 12 lashing eyes in the long wheelbase and 14 standard lashing eyes in the long wheelbase with extended rear overhang. Two of the foldable lashing eyes are located in the B-pillars. The Crafter also offers handy driver assistance systems as optional. These include Park Assist and Trailer Assist, which automatically steer the Crafter to parallel park or reverse-park your trailer, and Park Distance Control with proximity sensors. With all of this at your disposal, buying the Crafter is truly one of the safest decisions you can make.

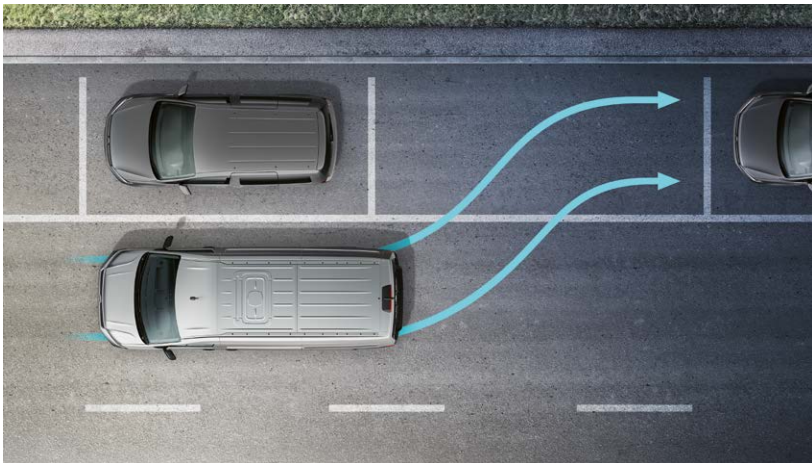

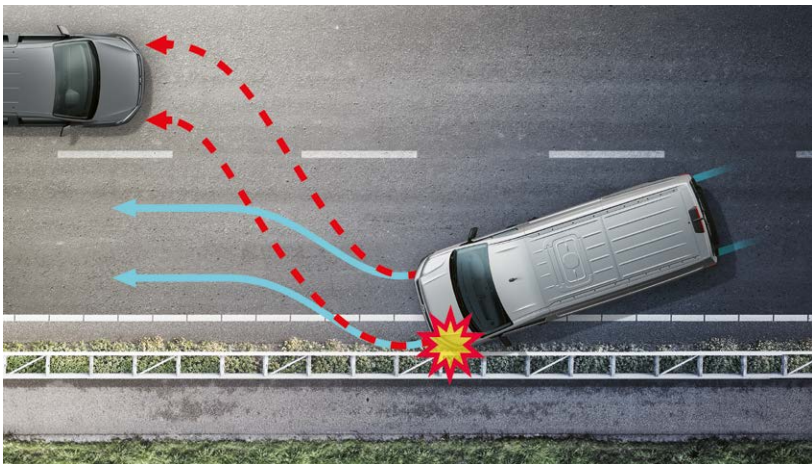

Save as **you drive**

The success of a business depends on the bottom line and with the Crafter you get value for money right from day one. Service intervals of 20,000 km will significantly lower running costs and the Crafter's outstanding reliability will avoid expensive downtime.

State-of-the-art diesel engines optimise fuel consumption and reduce wear and tear, which makes it look as good on the balance sheet as it does on the road. The Crafter is backed by a 2-year unlimited mileage warranty, including a 12-year anti-corrosion warranty – a real vote of confidence given the long distance demands placed on business vans. Top quality workmanship and the long service life of the Crafter also ensure a competitive resale value, which means that it pays its way right up to the last day.

Crafter

When size **does matter**

Crafter 35 Delivery Van medium wheelbase with normal roof

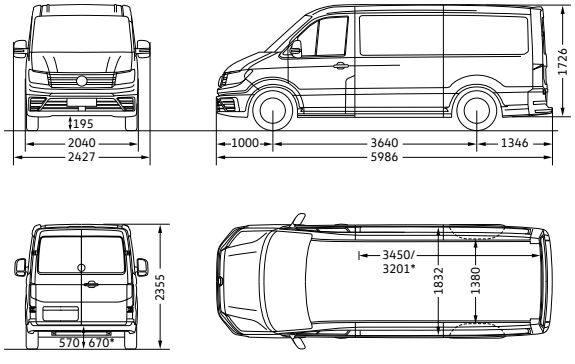

Crafter 35 Delivery Van medium wheelbase with high roof

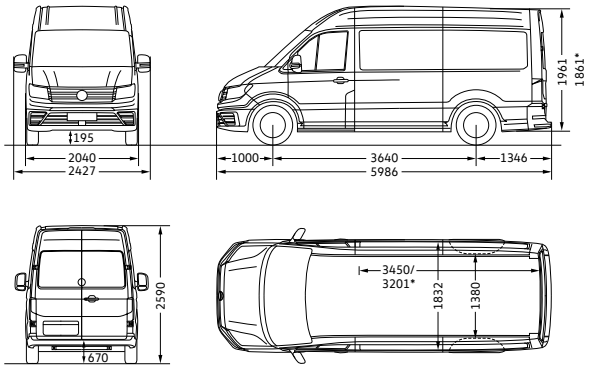

Crafter 50 Delivery Van long wheelbase with high roof

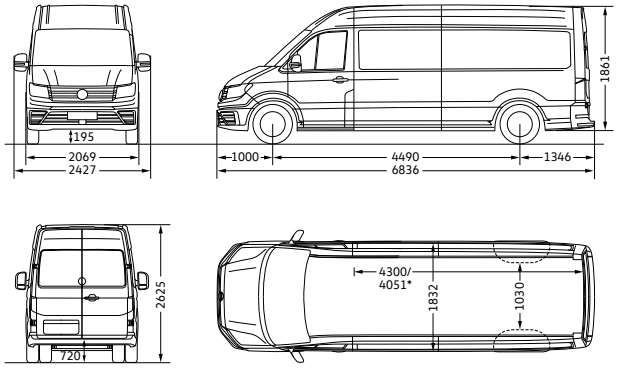

Crafter 50 Delivery Van long wheelbase with super-high roof

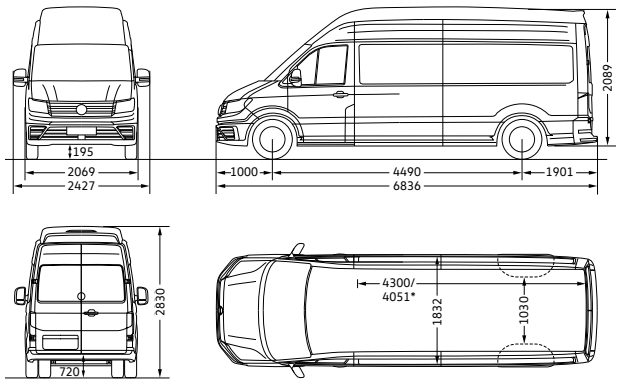

Crafter 50 Delivery Van long wheelbase with overhang and high roof

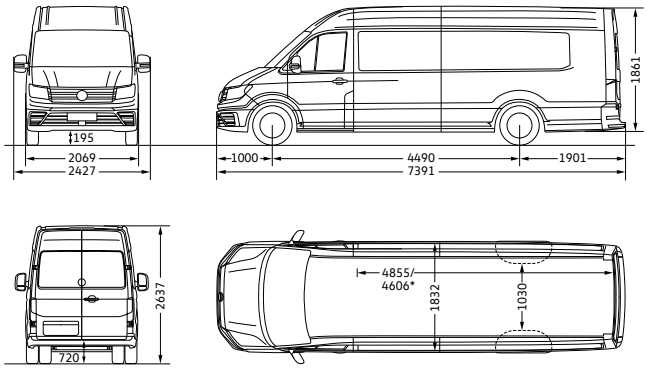

Crafter 50 Delivery Van long wheelbase with overhang and super-high roof

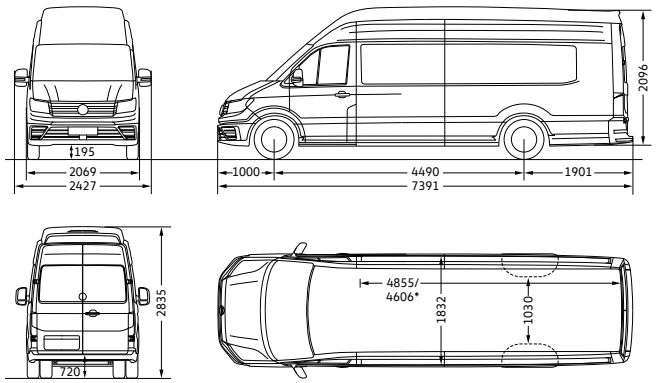

*This value applies for 4MOTION all-wheel drive.

Buying a Volkswagen is only the beginning of our journey together

At Volkswagen, it's our mission to keep you and your family moving forward on life's journey. That's why we have a range of products and services designed to keep your Volkswagen in optimum condition and give you peace of mind. From car services and maintenance plans, to genuine parts and roadside assistance, Volkswagen is with you all the way.

EasyDrive Vehicle Plans

You do life, we'll take care of the ride

Volkswagen's EasyDrive Vehicle Plans offer affordable and easy to understand cover on Service and Maintenance Plans. Our plans offer specialist care from qualified Volkswagen experts, ensuring your vehicle maintains its re-sale value. This way you can get back to enjoying the journey.

Get-Go

Service you know straight from the Get-Go

The Get-Go service is available to all Volkswagen drivers with a vehicle that's four years or older, and without a Service or Maintenance Plan. You can get an affordable annual service for your Volkswagen by knowing the rate from the get-go. Get-Go Service includes parts and labour and will help you to maintain your service history.

Commercial Vehicles

This information was effective as at July 2021 valid for model year 22 and is subject to change without notice.

Visit us at vw.co.za

©Volkswagen South Africa